Installation Instructions

Subject: 8oz glass contour 79" V Max product set up guide **Date: 08-31-99**

Kit Number: 1120692 **Rev A 08-31-99**

Installation Instructions:1120693

Vendors: 79" V Max

Purpose: Provide dispensing of special limit edition product.

Kit Includes

Quantity	***Part Number***	***Description***
4	1079422-1	79" Long bottle guide
2	1114348-4	Magnetic foam pad spacer - 45.3"
1	1078872	.47 Product Spacer
2	1073732	Foam tape pad (Bucket)
1	1112163	V Max Long sold out lever
1	1120693	Installation Instruction
1	1066112-1	Support Clip (Gray)
1	1032526	Hair spring cotter

***Caution:* Disconnect power cord from power source before beginning installation**

Installation (see Figure 1)

Step #1 Locate Back Spacer into position #13.

Step #2 Install .47 product side spacer (P/N1078872).

Step #3 Install long bottle guides (P/N1079422-1) into the right and left rear partition slots #9 & #10.

Step #4 Install long bottle guide (P/N1079422-1) into the right front partition slots D & E.

Step #5 Install the 45.3" long magnetic foam pads (P/N1114348-4) behind and in front of the neck guide located in position D & E on the right side partition.

Step #6 Install new long sold out lever (P/N1112163).

Step #7 Install foam pads (P/N1073732) into bucket. (See Figure 2)

Step #8 Install Gray C Clip (P/N1066112-1) into position #1 on gage bar.

Step #9 Install gage bar in #3 slot on front and rear mech. plate.

8oz glass contour 79” V Max Product Set Up Guide

Special Instructions for Loading 8oz glass bottles. (See Figure 1)

Step #1 Fully load 8oz glass bottles in the back of the column.

Step #2 Install long bottle guides (P/N1079422-1) into the left front partition slots D & E.

Step #3 Fully load 8oz product into front of the column.

Step #4 Repeat 1 - 4 for product load sequence.

Note: This set-up is for one column only.

Recommend product hopper dampener field kit.

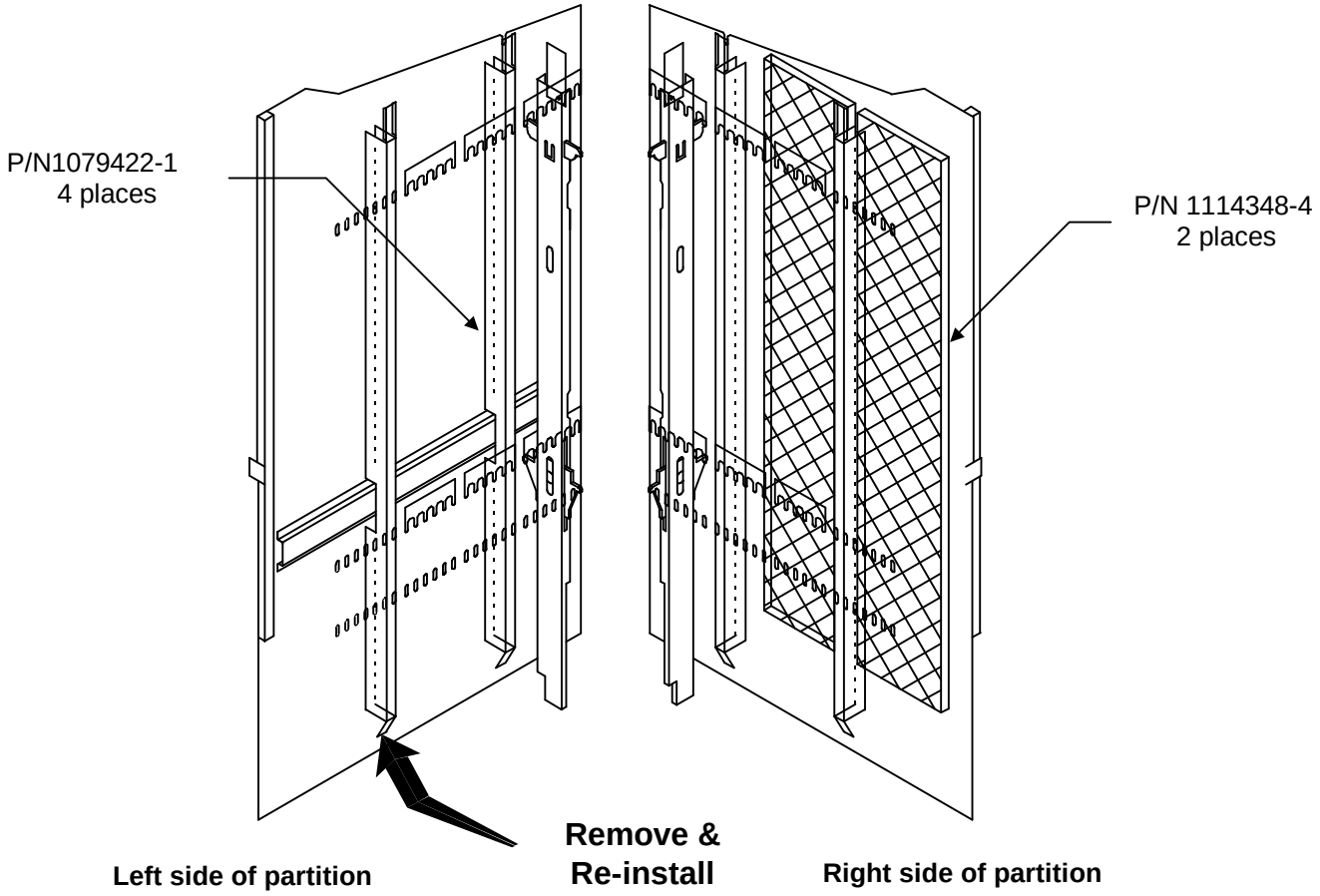

Figure 1

Subject: Foam Tape installation onto the Vend Bucket

Instructions

Step 1) Remove all product from the column and bucket**.**

Step 2) Working from below the bucket, clean and dry the area of the buckets where the foam tape is to be installed.

Step 3) Remove or tape over first clip.

Step 4) Apply 1st foam taped pad 1.75” from front of bucket wall and the second foam taped pad 4.80” from 1st pad. Align edge of foam pad to the flat inside edge opposite of the bucket (dispensing side). See illustration below.

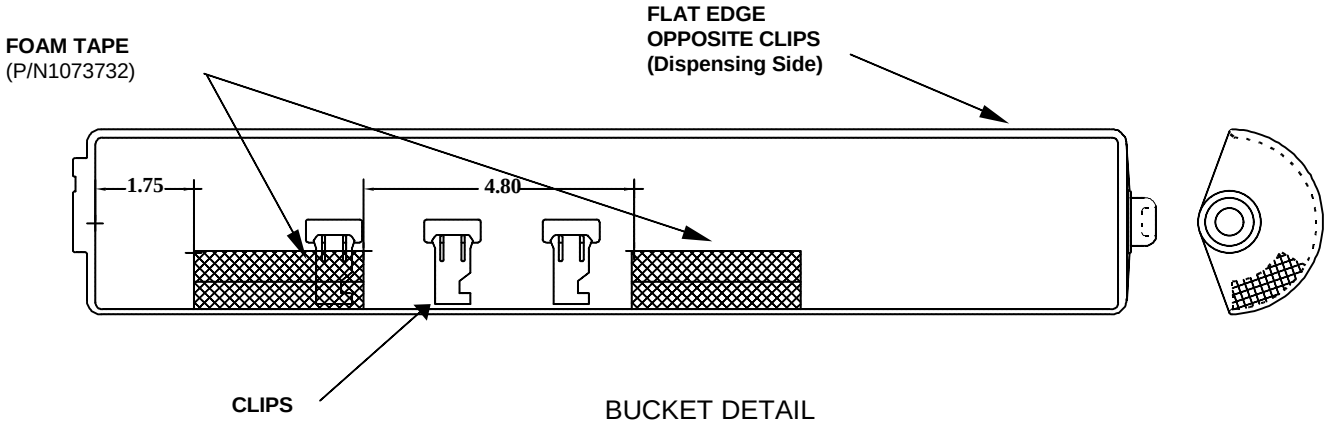

BUCKET DETAIL

Figure 2