Vendo® Engineering *V-Max* *Set Up Guide*

Size: 20oz / 591ml **Rev. B** **Date 12/30/98**
Pkg. Description/Type: 20oz / 591ml COKE BOLT MID-CARBONATED
Franchise: COKE **KIT# 1113228-2**

Column Setup

Cam Setting	Back Spacer	Neck Guide Locations	Gage Bar Clip Location	Gage Bar Location	Side Spacer	Sold Out Flap	Sold Out Spacer
2	17	Front Rt. & Left B,C	A/#1	#1	N/A	Long	N/A

Note: To properly vend product the V-Max must have the columns set up as illustrated.

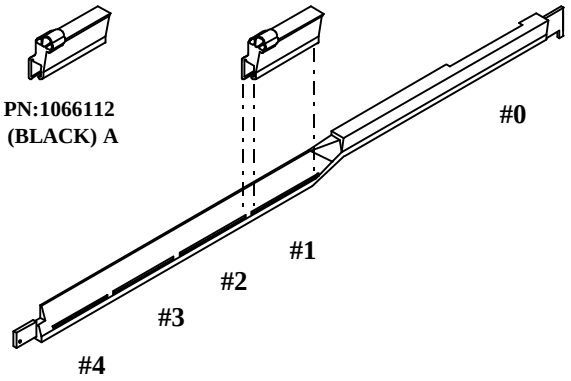

Gage Bar Clip Location

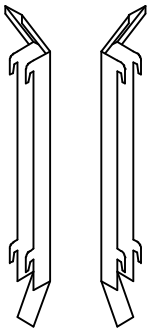

PN:1078899
Neck Guides

Set Up Guide

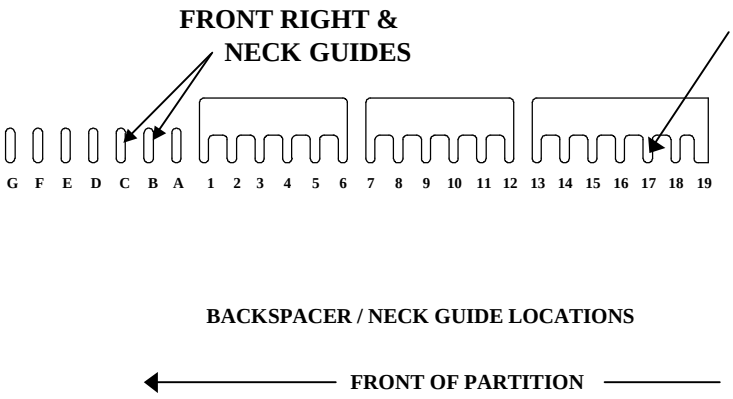

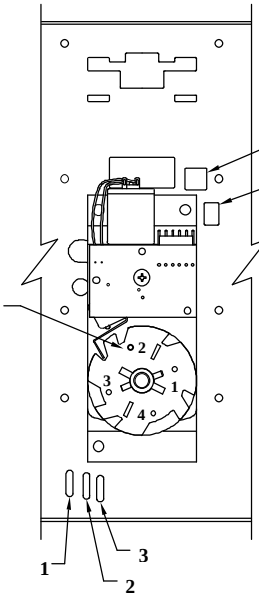

FOR OTHER PRODUCT SET-UP GUIDES, CONTACT THE VENDO COMPANY.
TEL: (559)439-1770 FAX: (559) 439-2083.

Installation Instruction #1120098