Vendo® Engineering *V-Max* *Set Up Guide*

Size: 16oz **Rev. A** **Date 5/21/02**
Pkg. Description/Type: Dasani Nutri Water
Franchise: Coca-Cola

Column Setup

Cam Setting	Back Spacer	Neck Guide Locations	Gage Bar Clip Location	Gage Bar Location	Side Spacer	Sold Out Flap	Sold Out Spacer
2	12	N/A	C/#1	#2	1122032 Loc. #1	Long	N/A

Note: To properly vend product, the V-Max must have the columns set up as illustrated.

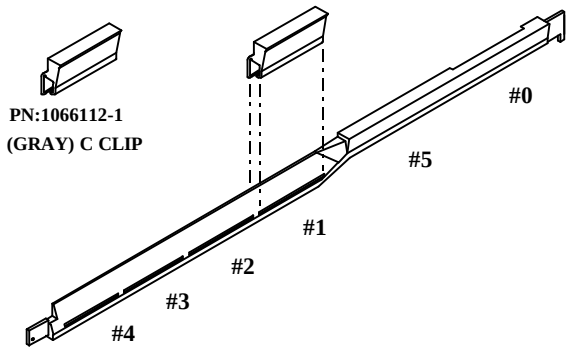

Gage Bar Clip Location

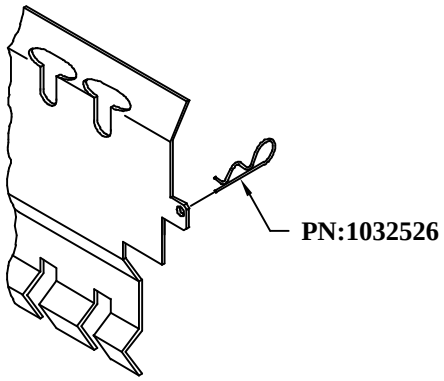

PN:1122032

Spacer

Set Up Guide

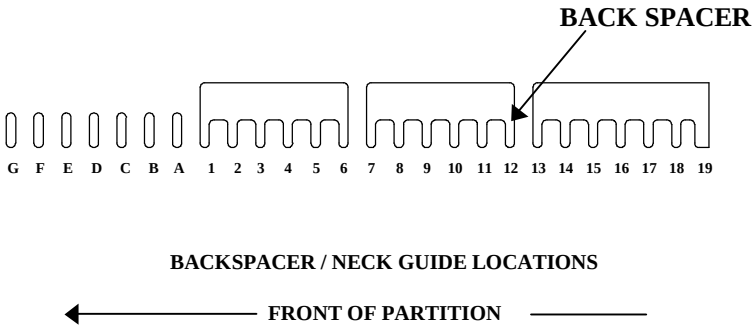

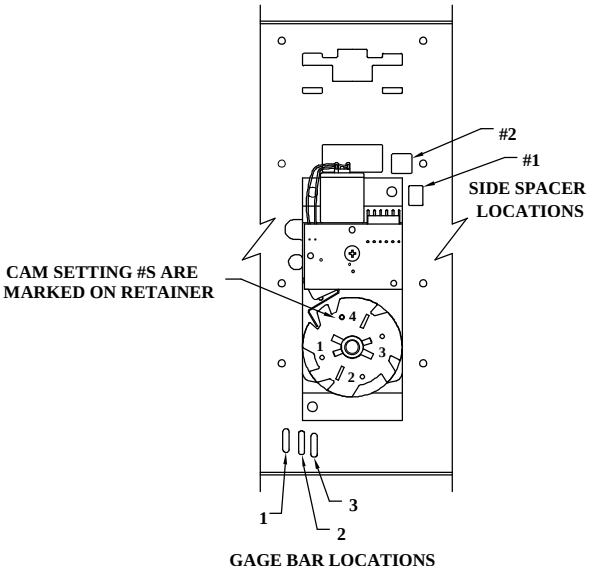

FOR OTHER PRODUCT SET-UP GUIDES, CONTACT THE VENDO COMPANY.
TEL : (559) 439-1770 FAX: (559) 650-3455.