Vendo® Engineering V-Max *Set Up Guide*

Size: 12oz / 355ml **Rev. A** **Date 06/07/01**
Pkg. Description/Type: 12oz / 355ml POWERADE PET
Franchise: ANY **KIT#**

Column Setup

Cam Setting	Back Spacer	Neck Guide Locations	Gage Bar Clip Location	Gage Bar Location	Side Spacer	Sold Out Flap	Sold Out Spacer
3	16	N/A	B/#1 B/#2	#2	1122032 Loc. #1	Long	N/A

Note: To properly vend product the V-Max must have the columns set up as illustrated.

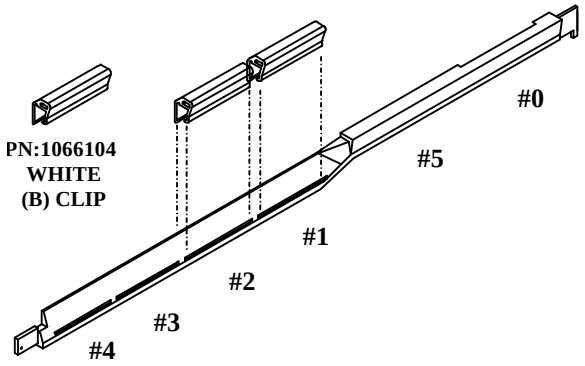

Gage Bar Clip Location

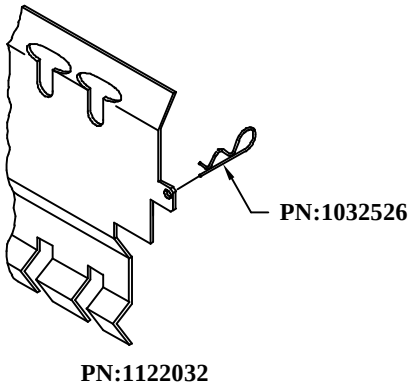

Spacer

Set Up Guide

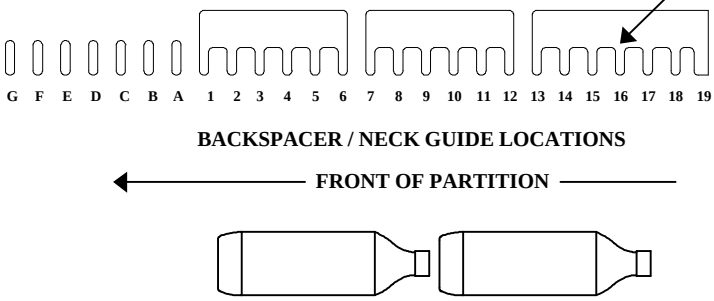

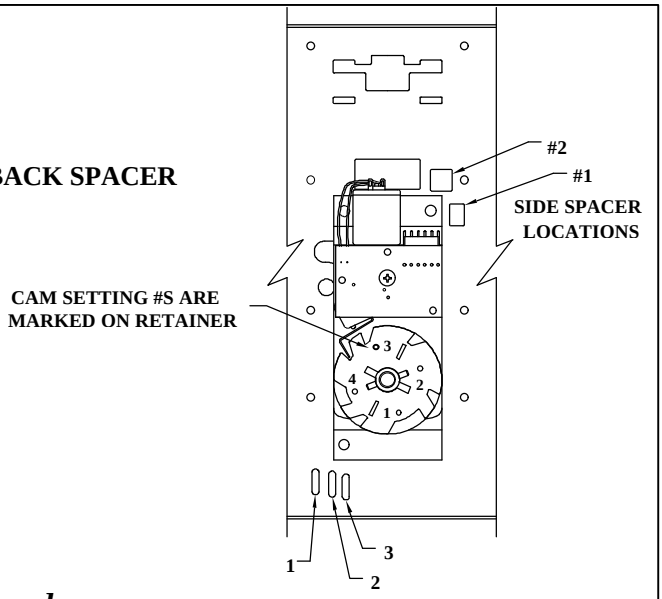

Note: Placement of bottle caps is to the back of the vendor

FOR OTHER PRODUCT SET-UP GUIDES, CONTACT THE VENDO COMPANY.
TEL: (559) 439-1770 FAX: (559) 650-3455.

Installation Instruction #