Vendo® Engineering 540/720 V-Max *Set Up Guide*

Size: 12oz / 355ML **Rev. C Date 1/16/03**
Pkg. Description/Type: DASANI
Franchise: COKE **KIT#1121854**

Column Setup

Cam Setting	Back Spacer	Neck Guide Location	Gage Bar Clip Location	Gage Bar Location	Magnetic Column Spacer (*)	Side Spacer	Sold Out Flap	Sold Out Spacer
2	9	N/A	C/#1	#2	TWO 1121822-5	1122032 Loc. #1	Long	N/A

Note: To properly vend product, the V-Max must have the columns set up as illustrated.
***Install magnetic column spacers into right side of partition above product side spacer (See Figure 1 for installation detail)**

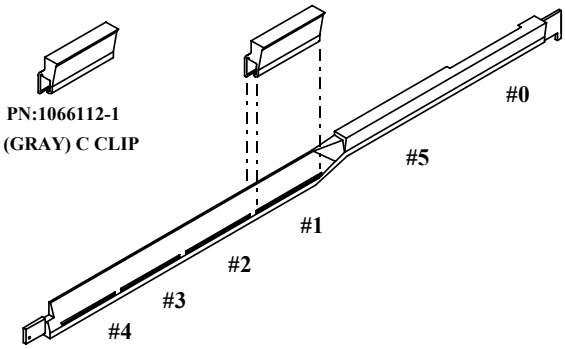

Gage Bar Clip Location

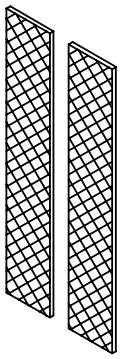

PN:1121822-5

Column Spacers

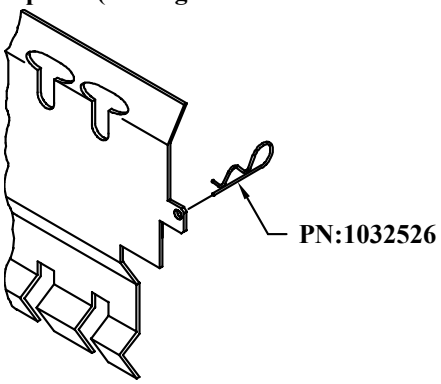

PN:1122032

Spacer

Set Up Guide

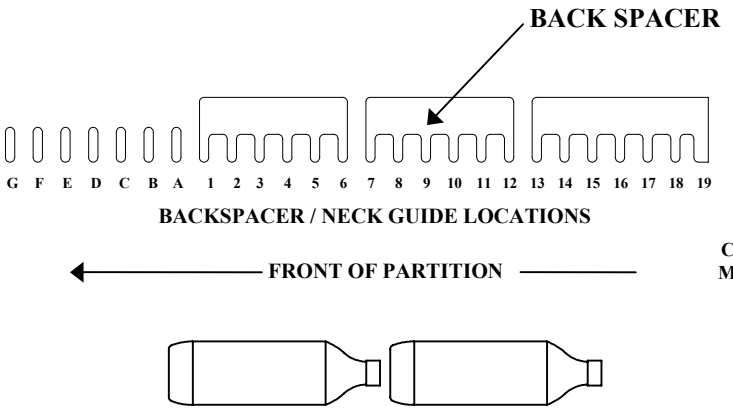

Note: Placement of bottle caps is to the back of the vendor

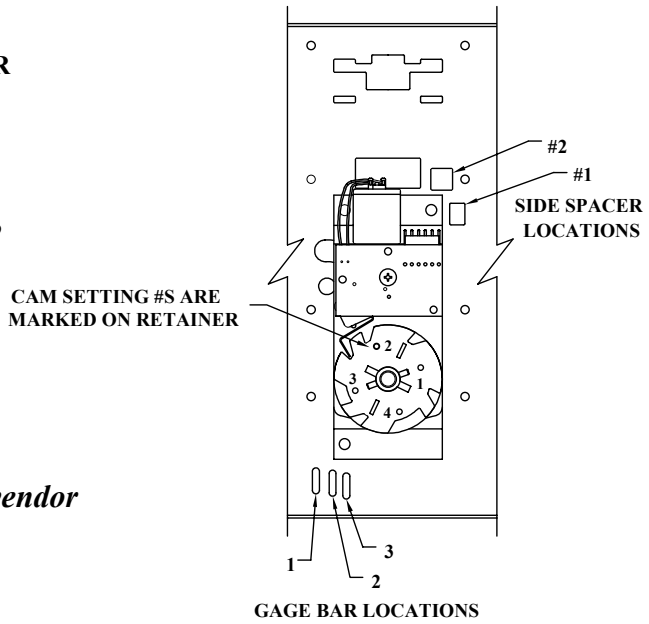

FOR OTHER PRODUCT SET-UP GUIDES, CONTACT THE VENDO COMPANY.
TEL: (559) 439-1770 FAX: (559) 439-2083.

Installation Instruction #1121864

<u>Caution:</u> Disconnect power cord from power source before beginning installation

<u>Installation (see Figure 1)</u>

Step #1 Locate Back Spacer into position #9.

Step #2 Install .27 product side spacer (P/N1122032).

Step #3 Install two of the 38" long magnetic foam pads (P/N1121822-5) on the right side partition.

Locate pads as shown in Figure 1 above the .27 product side spacer (P/N1122032)

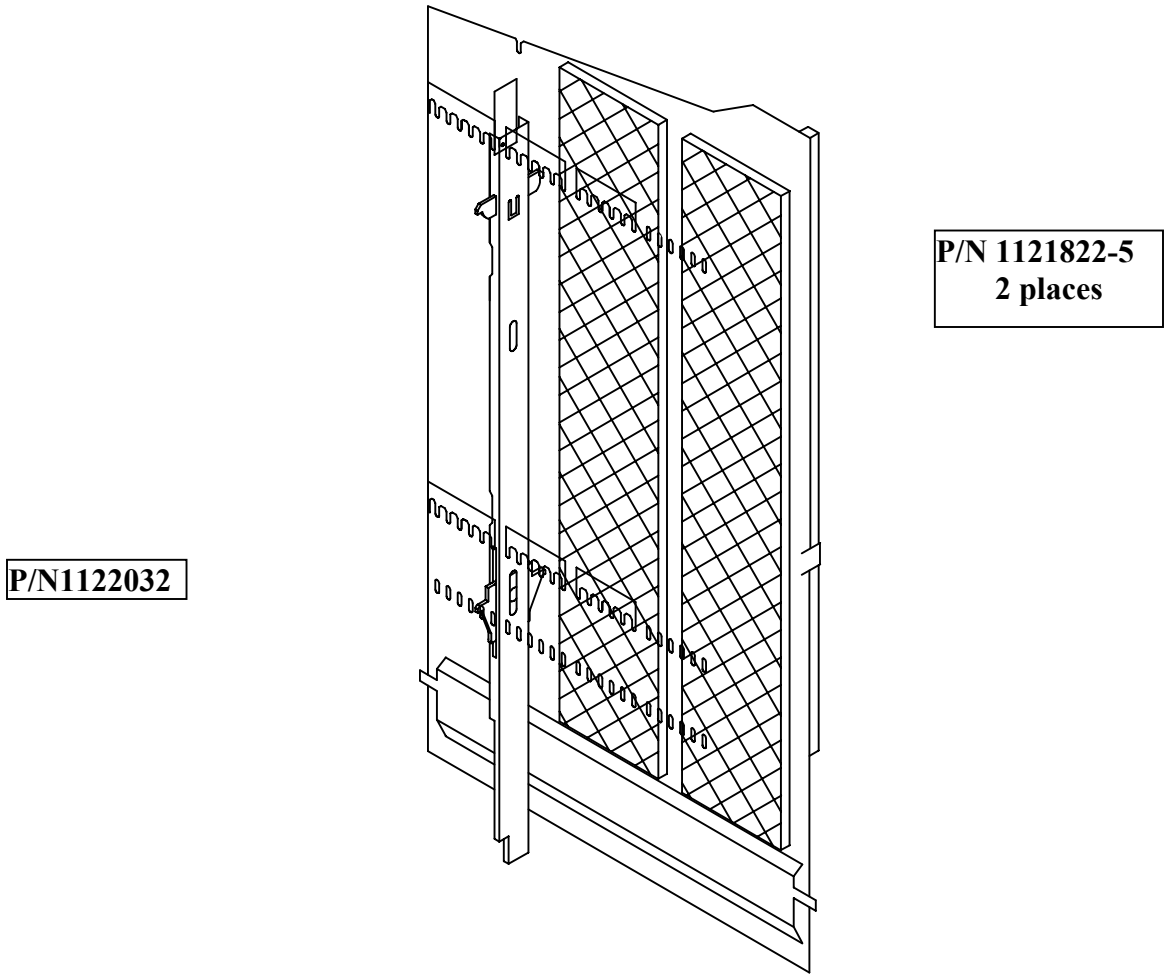

Figure 1

Right Side Partition